VEM250 ELECTRONIC VALVE USER AND MAINTENANCE MANUAL

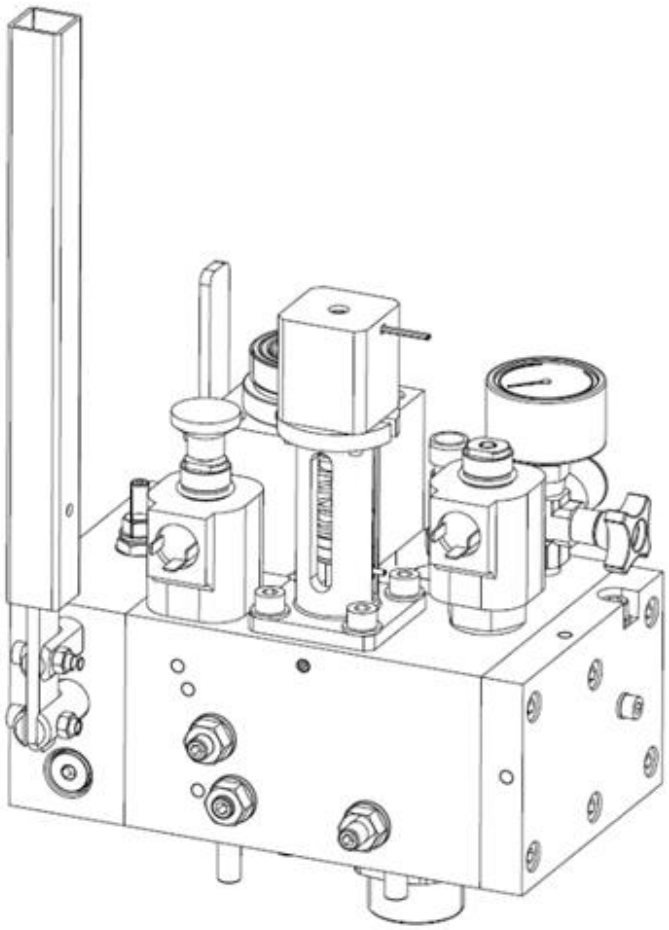

VEM250	EDCI049	Moris Italia	www.moris.it

INDEX:

1. FEATURES AND REQUIREMENTS 2
2. HYDRAULIC OIL OPERATION 2
3. SPACE REQUIREMENT, HYDRAULIC CONNECTION, ADJUSTMENTS 3
3.1. List of adjustments and components 4
3.2. Pressure relief valve adjustment 4
3.3. Piston rod counter-pressure adjustment 4
3.4. Maximum hand pump pressure adjustment - hand pump use 4
3.5. Adjustment of screw 2 and rupture valve activation test 5
4. HYDRAULIC DIAGRAM 6
5. CONTROLLER REQUIREMENTS 7
6. MLHCU CONTROL board 8
6.1. Electronic board connection list 8
6.2. Controller interface connection features 9
6.3. Command signal sequence 12
6.4. Deceleration switches distance 16
6.5. Motor PTC control option 16
7. FIRST INSTALLATION 17
8. BOARD parameters and adjustments 18
8.1. How to connect to the control board 18
8.2. Connecting to control board: how to modify a parameter and upload/download a file 18
8.3. Travel comfort adjustment graphs 19
8.4. List of possible parameters and adjustments 20
9. SAFETY AGAINST UNCONTROLLED movements 29
9.1. Description of components 29
9.2. Uncontrolled movement test requirements 29
9.3. Downward uncontrolled movement 30
9.4. Test of UCMP monitoring 30
10. USER INTERFACE 31
10.1. Display and System Digital Inputs 31
10.2. Bluetooth connection 31
10.3. Board operation light signals 32
10.4. Alarm codes and errors 35
11. MAINTENANCE AND TROUBLESHOOTING 38
11.1. Ordinary maintenance 38
11.2. Troubleshooting 39
11.3. Replacing or adjusting position 41
12. CERTIFICATION 41

1. FEATURES AND REQUIREMENTS

The VEM250 valve guarantees:

- Constant speed regardless of load
- Increased comfort with adjustable acceleration and deceleration in every travel phase
- Reduced running time
- Increased system reliability with control of operating parameters
- Reduced need for heat-exchangers and resistors
- Integrated pressure switch and temperature control functions
- Conformity with the EN 81.20 EN 81.50 Standards for uncontrolled descent movements, as it is equipped with a double safety valve and monitoring support function
- Reduction of installed power and consumption

Components of the VEM250 electronic valve:

- Electromechanical valve with stepper motor
- MLHCU control motherboard

Operating features:

- Speed: up to a 1 m/s
- Temperature: 5 ÷ 70 °C
- Pressure: 10÷50 bar
- Flow rate: 35÷250 l/min
- Tube-flex outflow: 1”, 1”/4, 1”1/2
- Integrated hand pump
- Integrated UCMP valve

Power supply:

- Electronic board: 24 VDC stabilized
- Main solenoid: 24 VDC (on request 48/110 VDC)
- Emergency solenoid (optional): 24 VDC

2. HYDRAULIC OIL OPERATION

!	**IMPORTANT**: Use of hydraulic oil with **ISO VG 46 viscosity** is prescribed.

The electronic valve is able to guarantee correct operation over the entire temperature range with ISO VG 46 viscosity oil; the use of oil with a different viscosity is not necessary.
We strongly recommend using an ISO VG 46 mineral hydraulic fluid with a viscosity index >110.

3. SPACE REQUIREMENT, HYDRAULIC CONNECTION, ADJUSTMENTS

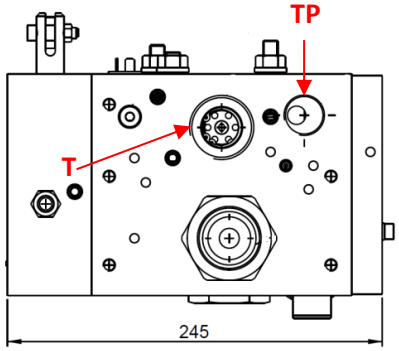

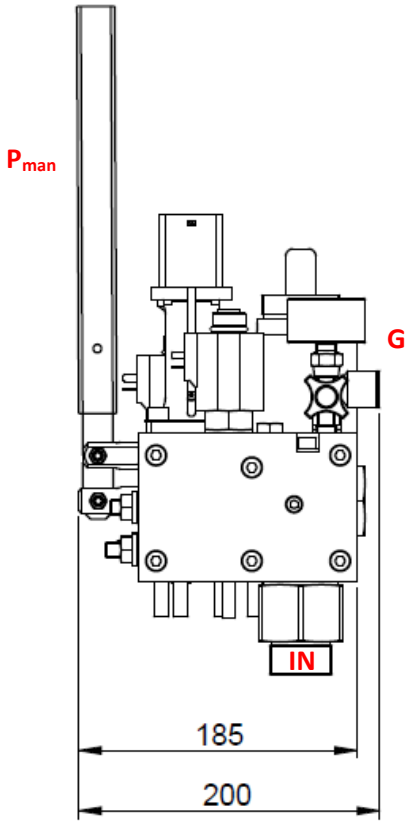

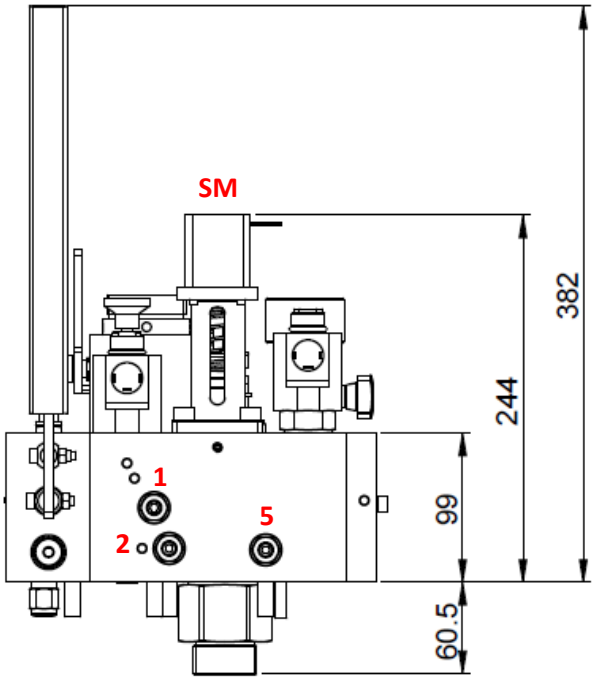

1:5

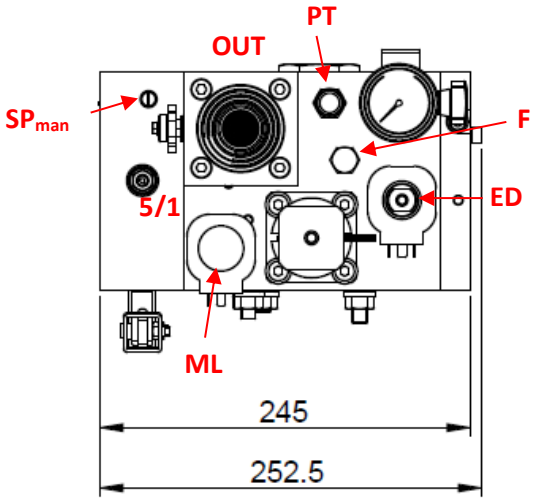

3.1. List of adjustments and components

- Screw 1: Piston rod counter-pressure adjustment: screw to increase counter-pressure
- Screw 2: safety-gear valve test: open to perform safety-gear valve test
- Screw 5: valve over-pressure adjustment: screw to increase pressure
- Screw 5/1: hand pump over-pressure adjustment: screw to increase pressure.
- Pman: hand pump.
- SPman: hand pump bleeding
- IN: valve inlet
- OUT: valve outlet
- T: main oil spool drain
- TP: over-pressure valve oil drain
- SM: stepper motor
- ED: downward solenoid valve
- MLV: emergency hand downward (optional with the Emergency coil)
- G: pressure gauge
- PT: pressure transducer
- F: inspectionable filter

3.2. Pressure relief valve adjustment

1. Close the shut-off valve, the lever must be positioned at 90° compared to the shut-off valve.
2. Make sure that the pressure gauge tap is open.
3. Loosen the screw nut 5.
4. Start the motor without the upward direction drive. Alternatively, run an upward drive for at least 3 times until a pressure equal to 1.4 the maximum plant pressure is reached.
5. Read the pressure value on the pressure gauge, on the PC application or on the APP.
6. If the read value differs from the desired value, adjust the screw until the required value is reached (1.4 of the maximum plant pressure).
7. Tighten the lock nut of Screw 5 and open the shut-off valve again.

3.3. Piston rod counter-pressure adjustment

1. Close the shut-off valve, the lever must be at 90°compared to the shut-off valve
2. Make sure that the pressure gauge tap is open.
3. Loosen the screw nut 1.
4. Press the manual lowering button.
5. Read the pressure value on the pressure gauge, PC application or APP. The pressure value should be approximately 5 bar.
6. If the value read differs from the desired value, adjust the screw until the required value is reached.
7. Tighten the lock nut of screw 1 and open the shut-off valve again.

3.4. Maximum hand pump pressure adjustment - hand pump use

1. Close the shut-off valve, the lever must be at 90° to the shut-off valve.
2. Make sure that the pressure gauge tap is open.
3. Loosen nut screw 5/1.
4. Use the hand pump lever to increase the pressure inside the valve.
5. Read the pressure value on the pressure gauge, PC application or APP.
6. If the read value differs from the desired value, adjust the screw until the required value is reached.
7. Tighten the lock nut of the 5/1 screw and re-open the shut-off valve.

NOTE 1: at the first commissioning of the elevator it is necessary to check the absence of air inside the valve. Unscrew the SPman air bleeder with a screwdriver and pump the oil until you can see some oil coming out of the SPman bleeder screw. Now re-tighten the SPman bleeder screw.

NOTE 2: Should you notice during the operation of the hand pump that the lift is not able to ascend, it will be necessary to repeat the operation described in NOTE 1. Make sure you always carry out this operation with an oil level higher than the minimum oil level in the tank.

3.5. Adjustment of screw 2 and rupture valve activation test

Screw 2 is the screw that allows the activation of the rupture valve. **Screw 2 must always be kept closed during the normal operation of the plant.**

RUPTURE VALVE ACTIVATION TEST:

1. Drive the lift at full load to the highest floor.
2. When the lift car stops, loosen the Screw 2 lock-nut and then loosen the screw by 2 or 3 turns.
3. Operate lift car downward call to the lowest landing. During the downward, check that the valve stops the lift.
4. At the end of the test, screw the screw 2 as far as it goes and tighten the lock-nut of Screw 2.
5. Use the hand pump to unblock the rupture valve.

	**WARNING:** If the rupture valve does not stop the lift, check the adjustment of the rupture valve on the cylinder.

4. HYDRAULIC DIAGRAM

HYDRAULIC SCHEME – electronic valve

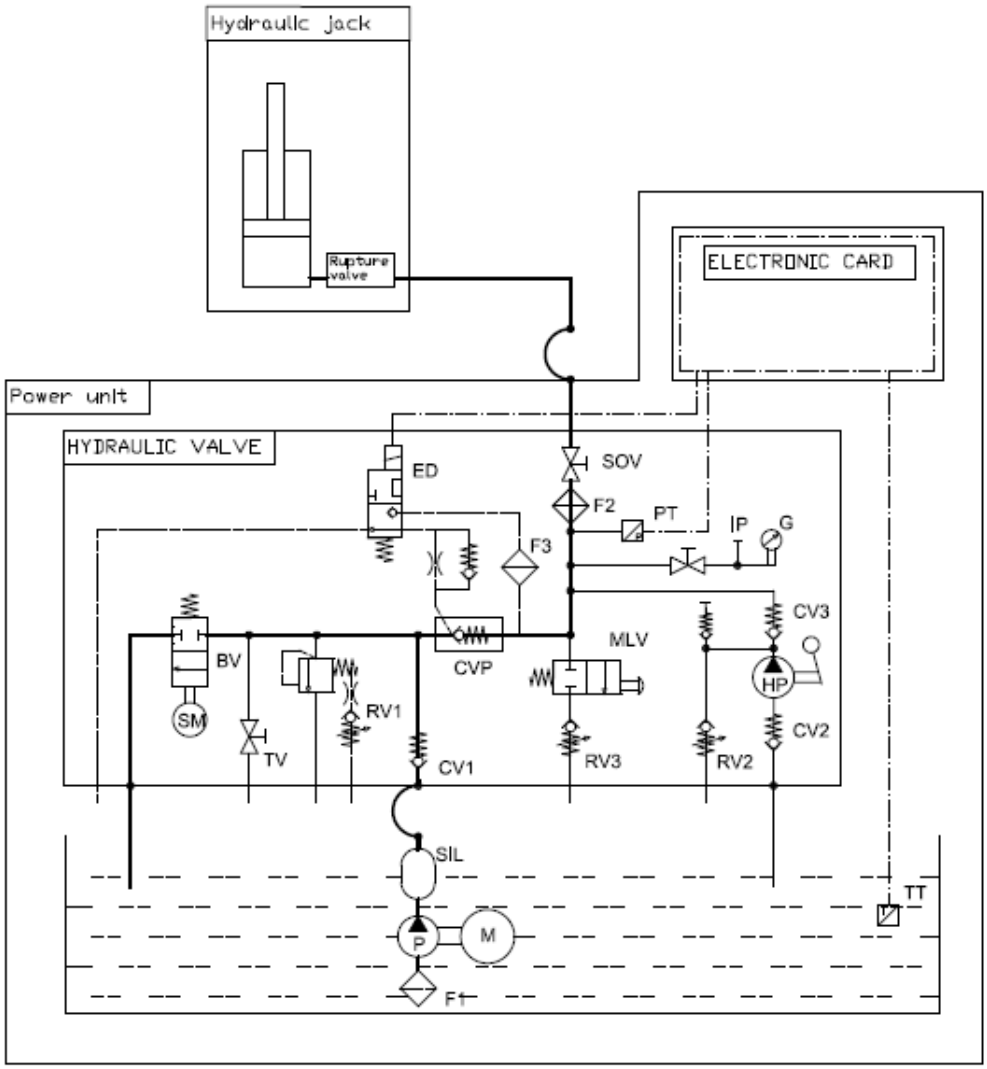

P	PUMP / pompa
M	MOTOR / motore
F	FILTER / filtro
SIL	SILENCER / silenziatore (*optional*)
CV	CHECK VALVE / valvola non ritorno
CVP	PILOTED CHECK VALVE / valvola non ritorno pilotata
ED	DOWN PILOT VALVE / elettrovalvola discesa
SM	STEPPER MOTOR / attuatore step-step
BV	BYPASS VALVE / valvola bypass

MLV	MANUAL LOWERING VALVE/valvola discesa manuale
RV	RELIEF VALVE / valvola di sovrapressione
SOV	SHUTOFF VALVE / valvola di chiusura
G	PRESSURE GAUGE / manometro
PT	PRESSURE TRANSMITTER / trasduttore pressione
TT	TEMPERATURE TRANSMITTER / trasd. temperatura
TV	TEST VALVE / valvola di test
IP	INSPECTION PORT / porta ispezione

5. CONTROLLER REQUIREMENTS

The VEM250VEM250 valve is compatible with any controller that at least meets the requirements of this chapter.
The VEM250 valve is certified as part of a system against the lift car uncontrolled downward movement with open doors. In order to meet the requirements of a safety component against car uncontrolled downward movement, the hydraulic device must be connected to a controller with a suitable device for detecting and interrupting uncontrolled movements, EU certified. The controller shall interface with the VEM250 valve, according to the instructions in this document.

The controller must be able to send at least the following signals to the control unit:

Signal/command

- Upward direction
- Downward direction
- Nominal speed
- Levelling/relevelling speed
- ED Downward solenoid valve command and power supply

The controller must be able to receive and correctly interpret the following signals:

- READY (mandatory)
- Motor-pump unit activation/deactivation command (mandatory)
- RUN/STOP (advised)

The READY output signals the status of the motherboard to the controller.
The controller installed in conjunction with the VEM250 valve must continuously monitor the READY signal it receives from the MLHCU motherboard. The controller must not allow the plant to move, and must not send any running commands to the valve and/or motor/pump unit when the READY signal is not set to the ON position

The MOTOR/PUMP command determines when the controller must activate/deactivate the motor/pump unit.

The RUN/STOP signal indicates to the controller the start and end of the running sequence. The controller needs to wait for RUN/STOP = Off before sending any running commands.

	IMPORTANT: To detect any car uncontrolled movements, the circuit required in EN81-20 clauses 5.3.8 and 5.12.1.4 must be used. If this circuit detects a movement of the car with the doors not closed, outside the unlocking area, it prevents the controller from sending any command to the valve. The system must only be reset by authorised and suitably trained personnel.
	WARNING: The VEM250 electronic valve is certified as part of a safety component. Check the certificate to determine the maximum time for detecting uncontrolled movement required by the controller

6. MLHCU CONTROL BOARD

6.1. Electronic board connection list

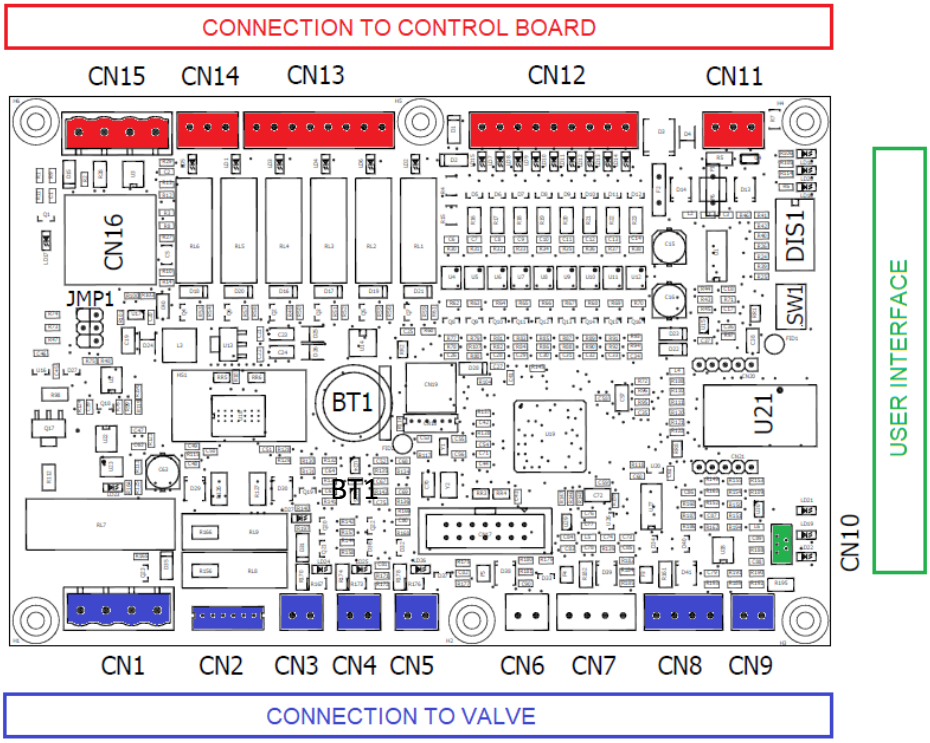

Input/output	Description
CN1	Emergency and Downward solenoid valve connection output
CN2	Stepper motor power supply output
CN3	S1 sensor input
CN4	S2 sensor input
CN5	S3 sensor input
CN6	Motor PTC input (optional)
CN7	/
CN8	Pressure transducer input
CN9	Temperature transducer input
CN10	USB port (micro USB type)
CN11	motherboard power supply
CN12	Speed and direction inputs
CN13	Programmable relay outputs
CN14	RUN/STOP and READY output
CN15	Emergency and downward solenoid valve control
CN16	CAN port
DIS1	Display
JMP1	Downward solenoid valve power supply ED selection jumper
U21	Blue-tooth interface
SW1	Setting switches
BT1	System clock battery

6.2. Controller interface connection features

CN11 CONNECTOR: board power supply, 3.5mm pitch

PIN	*Features*	*Description*
1	Gnd	board power-supply mass
2	0v	Power supply negative
3	+24Vdc, stabilized	Power supply positive (±10%)

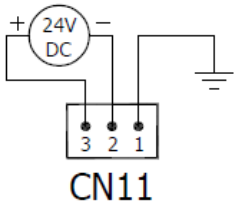

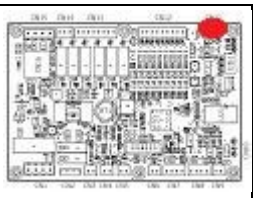

NOTE: maximum board current consumption 1.5A

CN12 CONNECTOR: speed and direction inputs, 3.5mm pitch

PIN	*Features*	*Description*
1	DI1, 24Vdc, PNP (NPN)	Upward travel command input
2	DI2, 24Vdc, PNP (NPN).	Downward travel command input
3	DI3, 24Vdc, PNP (NPN).	Speed command input (See speed list %%)
4	DI4, 24Vdc, PNP (NPN).	Speed command input (See speed list %%)
5	DI5, 24Vdc, PNP (NPN).	Speed command speed list %%)
6	DI6, 24Vdc, PNP (NPN).	Input (optional, free)*
7	DI7, 24Vdc, PNP (NPN).	Input (optional, free)*
8	DI8, 24Vdc, PNP (NPN).	Safety chain control input (optional-see SW1)
9	Comune Input. 0Vdc (24Vdc) **	Common Inputs. Default 0 Vdc, with PNP connection. (24 Vdc with signals referred to +24V instead of 0V, NPN connection)

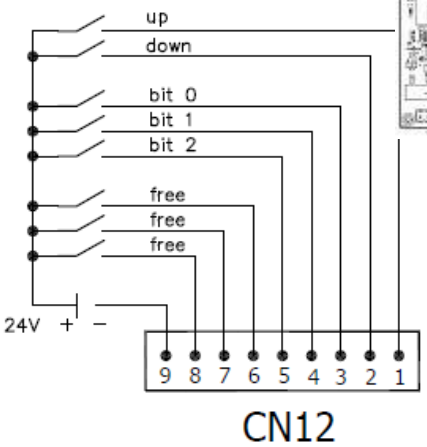

Speed list			
DI5 bit 2	**DI4 bit 1**	**DI3 bit 0**	**Speed**
0	0	0	Leveling/Releveling
0	0	1	Nominal speed
0	1	0	Inspection (optional)
0	1	1	Home (optional)
1	0	0	Low floor (optional)
1	0	1	Re-levelling (optional)
1	1	0	Free speed
1	1	1	Free speed

%% speed list: through the use of the 3 bits (DI3, DI4, DI5) it is possible to manage 8 different speeds.

*Programmable inputs as required (optional).

** The figure shows the option with a PNP connection. Alternatively, a connection with an NPN circuit is possible.

CN13 CONNECTOR: programmable relay outputs, 3.5mm pitch

PIN	*Features*	*Description*
1	DO1, Relay 1 NO Contact, 5A, 250Vac / 30Vdc	Motor-pump unit activation/deactivation command
2	DO1, Relay 1, Common.	
3	DO2, Relay 2 NO Contact, 5A, 250Vac / 30Vdc	Programmable output (Factory setting Maximum oil temperature)
4	DO2, Relay 2, Common.	
5	DO3, Relay 3 NO Contact, 5A, 250Vac / 30Vdc	Programmable output (Factory setting Overload warning)
6	DO3, Relay 3, Common.	
7	DO4, Relay 4 NO Contact, 5A, 250Vac / 30Vdc	Programmable output (Factory setting Full load signal)
8	DO4, Relay 4, Common.	

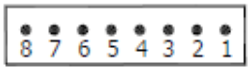

CN13

NOTE: outputs can be programmed with NO/NC contact. Factory setting NO (par. 300).

NOTE2: the outputs (relay 2,3 and 4) can be programmed with different functions (see par. 302_316).

CONNECTOR CN14, RUN/STOP and READY output, 3.5mm pitch

PIN	*Features*	*Description*
1	DO5/6, Relay 5/6, Common.	Relay 5 and 6 common output
2	DO5, Relay 5 NO Contact, 5A, 250Vac / 30Vdc	RUN/STOP command (its connection to the controller is recommended however optional)
3	DO6, Relay 6 NO Contact, 5A, 250Vac / 30Vdc	READY command

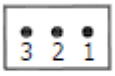

CN14

NOTE: outputs can be programmed with NO/NC contact. Factory setting NO.

CN15 CONNECTOR: emergency and downward solenoid valve command, 5mm pitch.

PIN	*Features*	*Description*
1	Emergency valve 0Vdc.	Emergency Solenoid Valve Power Supply (optional)
2	Emergency valve 12Vdc.	
3	Downward Valve 0Vdc.	Downward valve Power supply Power supply voltage limits: 24V: 19÷27 V (only on request: 48V: 38÷55 V 110V: 96÷142 V) PLEASE NOTE: power supply only Vdc 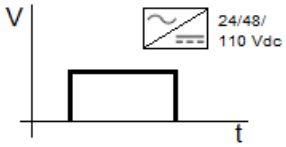
4	Downward Valve 24 (48/110Vdc).	

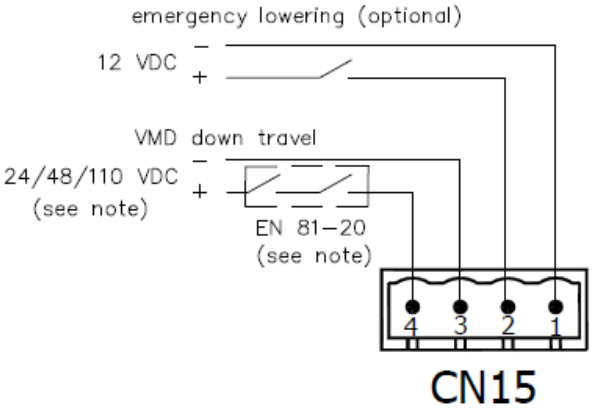

NOTE: solenoid valve supply voltage can be selected via Jumper JMP1

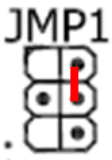

24v

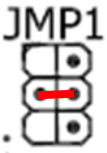

48v

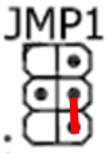

110v

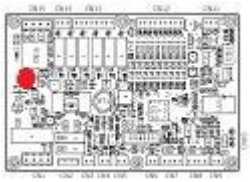

NOTE: the ED valve power supply shall depend on the controller safety devices.

IMPORTANT: the board accepts only Vdc voltages on signals and power supplies.

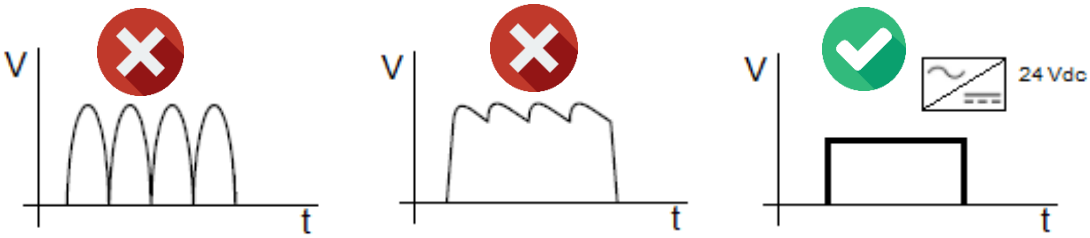

6.3. Command signal sequence

UPWARD DIRECTION GRAPH

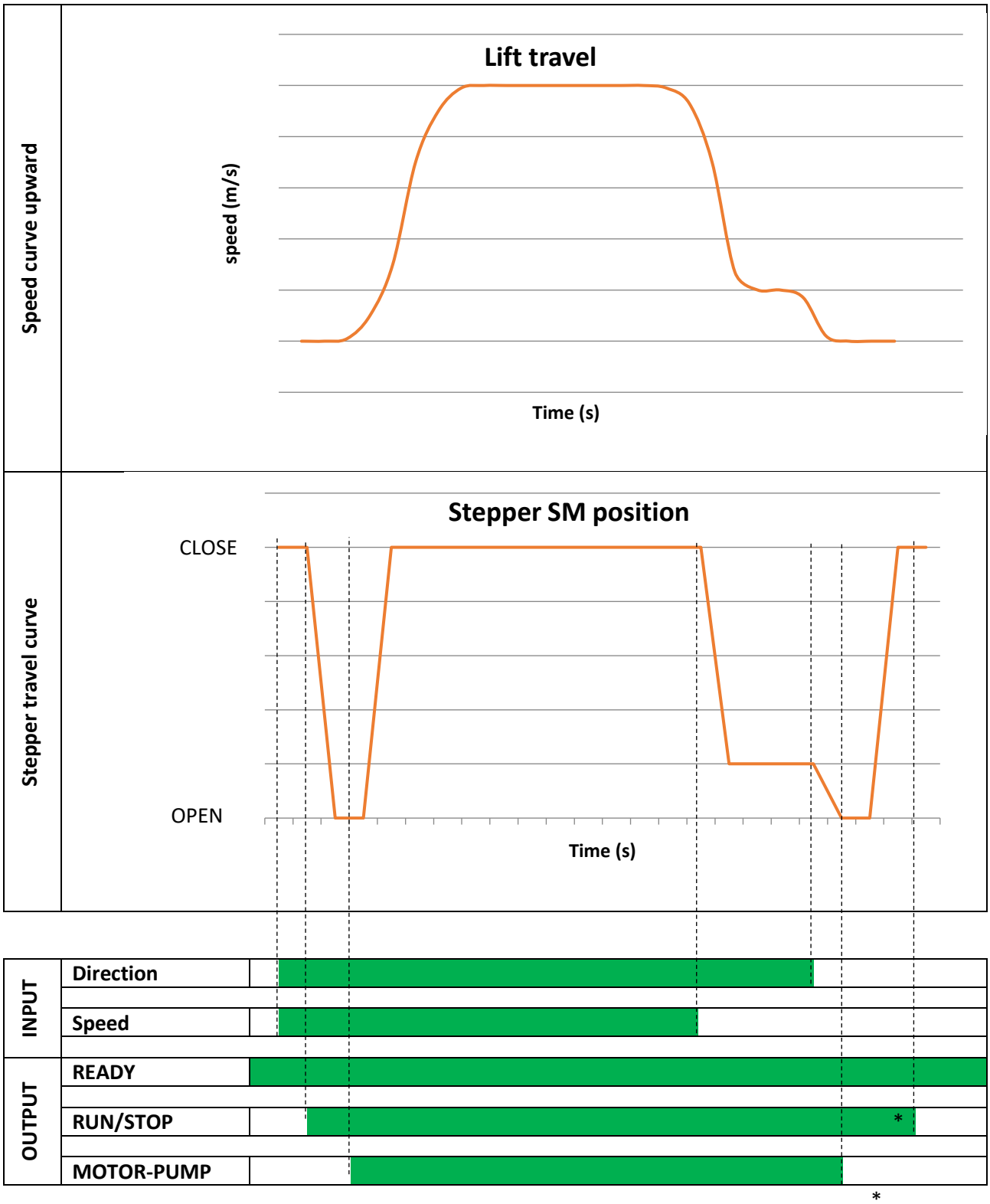

*** no new input command to the board until Run/stop in ON. The time for run/stop OFF after direction command OFF is about 4 sec**

Upward start sequence

1) The board must be in READY=ON mode. In READY=OFF mode, the controller does not send any commands to the board.
2) If the RUN/STOP output is OFF, the controller can send the speed and direction commands.
3) The board activates the RUN/STOP=ON output.
4) The board activates the MOTOR-PUMP actuation output.

Upward slowdown and stop sequence

1) The controller removes the speed command for the deceleration sequence.
2) The controller removes the direction command for the stop sequence.
3) When the lift plant is stationary, the board deactivates the PUMP-MOTOR output.
4) The board deactivates the RUN/STOP output.
5) Only at this point can the controller command a new sequence.

Key: 1=input ON, 0= input OFF.	**upward input command logic (connector CN12)**				
	DI5 (bit 2)	**DI4 (bit1)**	**DI3 (bit0)**	**DI2**	**DI1**
Levelling/relevelling speed	0	0	0	0	1
Rated speed	0	0	1	0	1
Inspection speed	0	1	0	0	1
“home” speed	0	1	1	0	1
Intermediate speed (Low floor)	1	0	0	0	1
Relevelling/levelling speed	1	0	1	0	1

DOWNWARD DIRECTION GRAPH

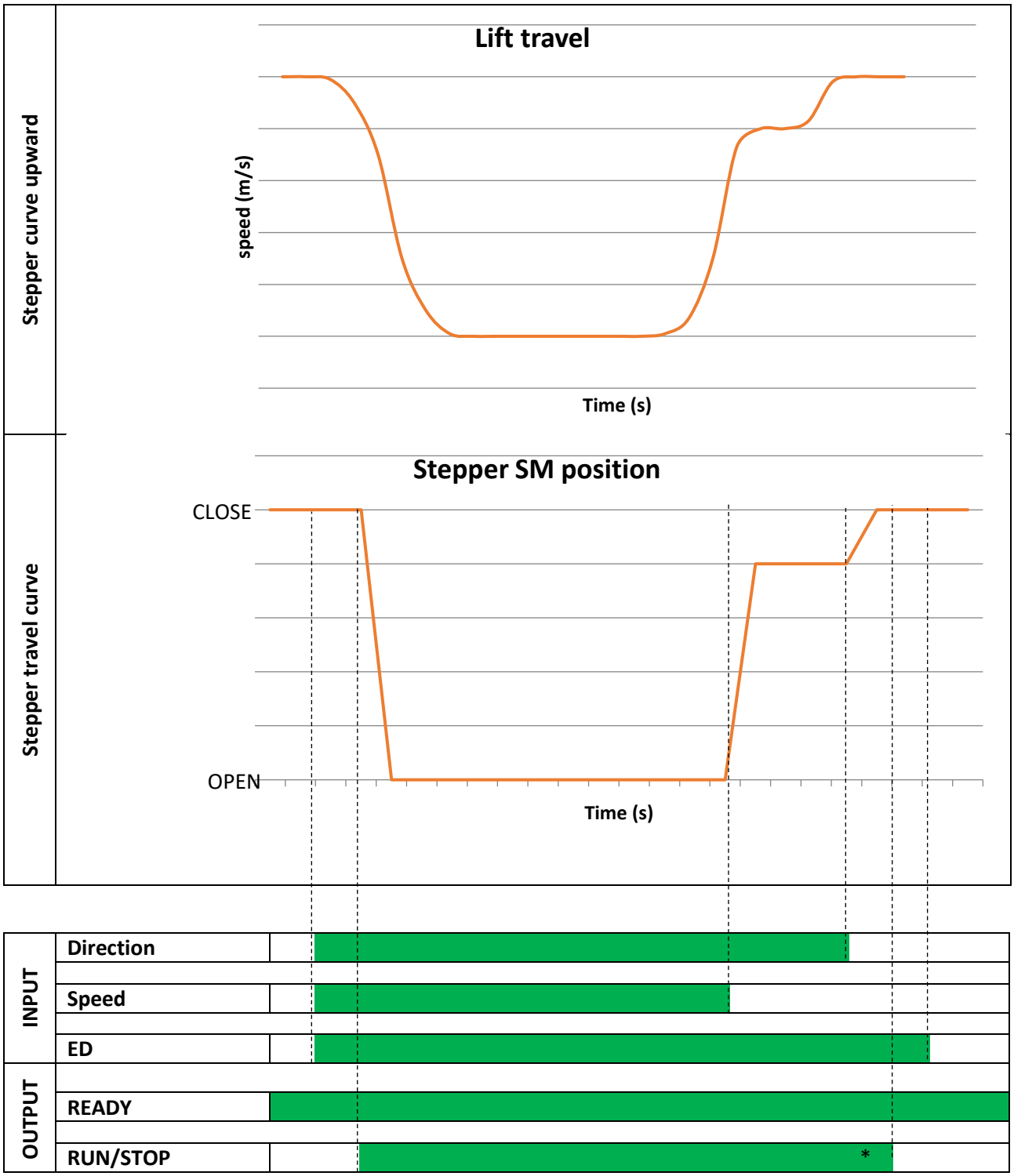

*** no new input command to the board until Run/stop in ON. The time for run/stop OFF after direction command OFF is about 3 sec**

Downward start sequence

1) The board must be in READY=ON mode. In READY=OFF mode, the controller does not send any command to the board.
2) If the RUN/STOP output is OFF, the controller can send the speed, direction and ED solenoid valve activation commands.

Downward slowdown and stop sequence

1) The controller removes the speed command for the deceleration sequence.
2) The controller removes the direction command for the stop sequence.
3) The board deactivates the RUN/STOP output.
4) The controller deactivates the ED solenoid valve (*).
5) Only at this point can the controller command a new sequence.

(*) If the RUN/STOP signal has not been connected to the controller, it must wait at least 1 second before deactivating the ED solenoid valve.

Key: 1=input ON 0= input OFF.	**Downward input command logic (connector CN12)**				
	DI5 (bit 2)	**DI4 (bit1)**	**DI3 (bit0)**	**DI2**	**DI1**
Levelling/relevelling speed	0	0	0	1	0
Rated speed	0	0	1	1	0
Inspection speed	0	1	0	1	0
Power factor correction speed (HOME)	0	1	1	1	0
Intermediate speed (Low floor)	1	0	0	1	0
Relevelling/levelling speed	1	0	1	1	0

6.4. Deceleration switches distance

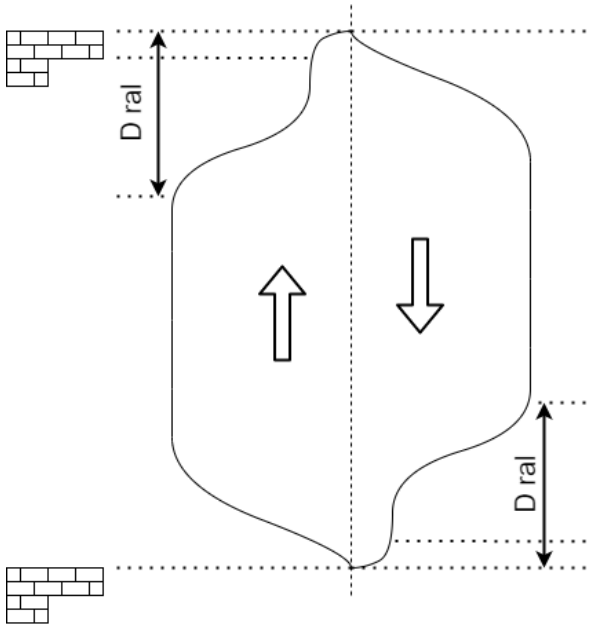

Advised distances for the positioning of the deceleration magnets, depending on the nominal speed of the plant	
Nominal speed (Vn)	Distance between deceleration magnets Dral (mm)
0,15	250
0,15÷0,40	660
0,40÷0,65	1070
0,65÷0,85	1400
0,85÷1,00	1650

The values shown above are those which allow the valve to be adjusted with a high degree of comfort during the deceleration phase of the lift plant, both upwards and downwards.

It is then possible to adjust the deceleration distance (by decreasing them) and the comfort of the plant by means of the valve parameters explained in chapter 7.

IMPORTANT: In order to achieve the best possible comfort, all landing magnets should be set at the same distance. Try to ensure a positioning accuracy of 5 mm.

6.5. Motor PTC control option

As an option, the board can manage the motor thermal protection probe of the motor pump unit. If you wish to manage the PTC probe via the MLHCU board instead of via the controller, you will need to:

- Add a connection on the power unit between the terminal board and the board: the motor thermal protection (position 1 and 2 on the terminal board auxiliaries) must be connected to input CN6 of the board.
- Set parameter Par. 912 to ON (default=OFF)

If the maximum temperature threshold is reached, the board reports a specific error (alarm A13) and does not accept any further commands.
By means of parameter Par. 230 it is possible to make this error retentive (default=OFF); if ON, a reset of the error is required by the operator to put the board back into operation.

7. FIRST INSTALLATION

During the first installation phase, we advise on the following procedure:

1) Place the hydraulic power unit in the machinery room.
2) Connect the flexible pipe to the hydraulic power unit gate valve and then open the gate valve, taking care not to damage the motherboard on the tank.
3) Wire the motherboard valve following the instructions in chapter 6. When wiring and assembling the hydraulic power unit, take care not to drop any impurities inside the power unit. Always keep the control motherboard clean and covered.
4) Wiring the electrical part of the motor power.
5) Insert the oil in the hydraulic power unit, making sure that the pump motor is always covered with oil. While doing this, be sure to protect the electronic motherboard on the tank from any oil spillage.
6) Set the plant to inspection/maintenance mode.
7) Power up the motherboard. Caution: the motherboard is powered at 24 VDC.
8) Wait for the motherboard to perform the power-up cycle (about 30 seconds).
9) The motherboard is in operating mode when the indication R03 appears. If R03 does not appear, see chapters 10 and 11 (checking for alarms and errors).
10) Try to operate an ascent cycle in inspection/maintenance mode. Check the pressure increases on the pressure gauge. Carry out this operation for 5 seconds.
11) If, after 5 seconds, the plant does not start to ascend, stop the ascent command.
12) Repeat steps 10 and 11 until the pressure gauge shows the nominal pressure of the plant and the lift car starts moving.
13) At this point, carry out 3 upward and 3 downward travels in maintenance operation, checking the correct functioning of the plant.
14) Complete the lift assembly and put the lift into normal operation.
15) Perform 3 upward travels and 3 downward travels, at idle and full load, checking the correct operation of the lift. See chapter 8 for system speed and comfort adjustments.
16) Enable Par. 908 for plant minimum pressure alarm.
17) Cover the motherboard with a cover and clean the surface of the hydraulic power unit from any impurities.

8. BOARD PARAMETERS AND ADJUSTMENTS

8.1. How to connect to the control board

It is possible to connect to the control board through the following modes:

- USB connection via CN10 port. In this case, the interface with the control board is via PC application.
- Connection via Bluetooth, U21. In this case, the interface with the control board is via mobile APP.
- Connection via CAN port, CN16 port.

8.2. Connecting to control board: how to modify a parameter and upload/download a file

Application

When opening the application, choose the selected language. Then select the user level via the "IN" key, select a target and choose the desired board from the menu.
A menu will be displayed with the parameters that can be selected. The following is displayed for each parameter:

- ID: parameter identifier
- Parameter name and description
- Parameter unit of measurement
- Minimum and maximum values of the parameter

To connect to the board, select the online buttons and then “connect”. In the Get column, the parameters entered in the board will be displayed. In the SET column, the parameters can be changed. If a parameter is changed, the GET value becomes equal to the SET value within few seconds and becomes yellow, which means that the data has been changed. All values changed from the default factory settings will be highlighted in yellow. It is possible to create, save or open a file by means of the "file" button at the top left. For further explanations on how to use the application, please refer to the user manual supplied with the application.

See manual MM04006 inside the software by press on “?”

Mobile APP

When opening the Mobile APP, download the latest version of the application and authenticate with the credentials provided by the manufacturer.
Then, select the board type and choose the desired menu version (select the latest available version).
Change the access level if necessary. To connect to the board, follow the same steps as described for the application.

See manual MM04003.

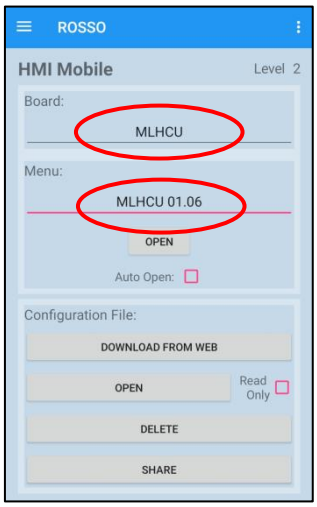

8.3. Travel comfort adjustment graphs

The following diagram shows the effects of the parameters modification for the change of the upward and downward travel comfort. For a full description of all available parameters, see chapter 8.4.

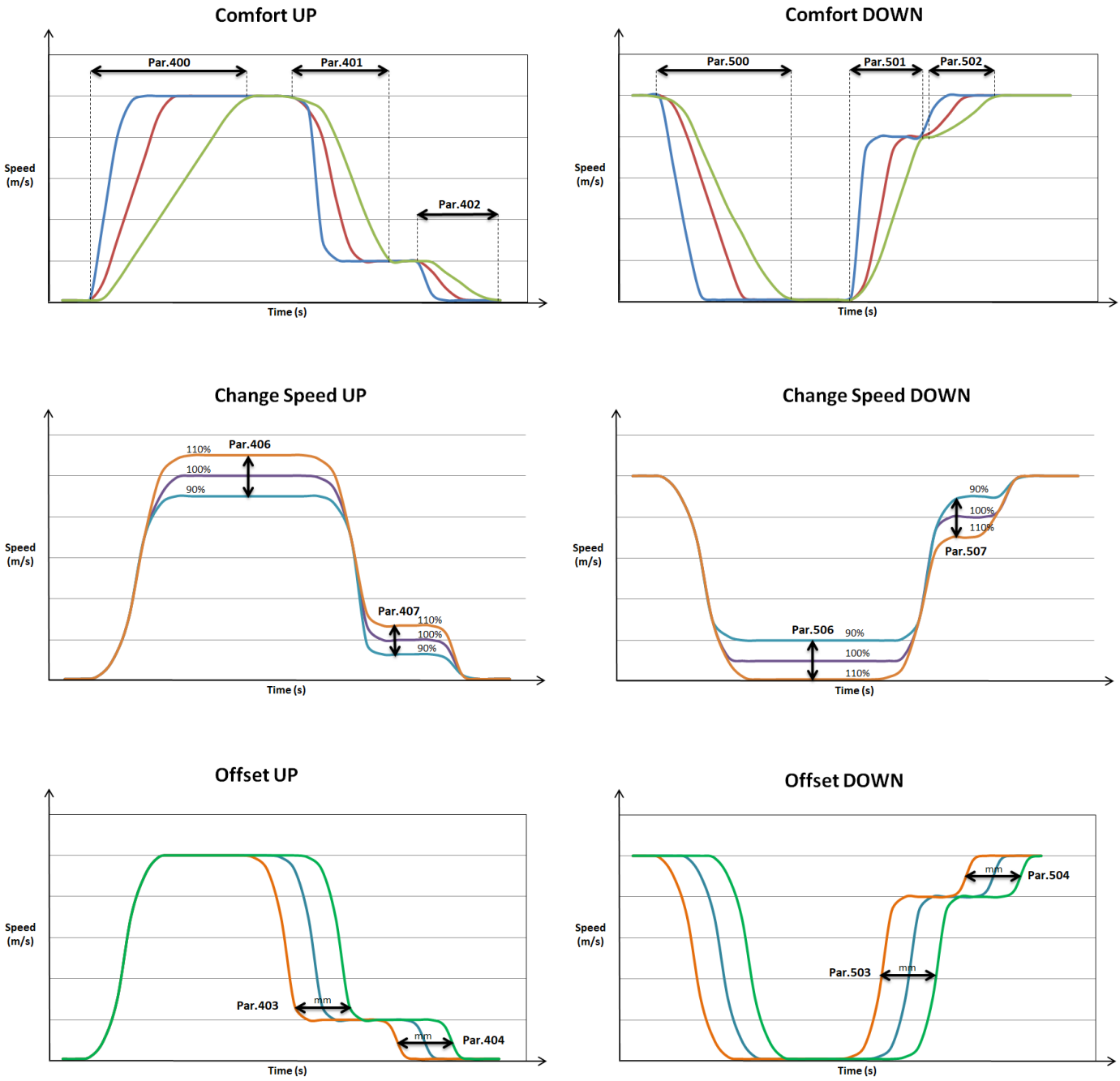

8.4. List of possible parameters and adjustments

The lines highlighted in grey need at least a level 2 to be displayed.

Password for level 2=1234.

MENU

- 1.. Diagnostics
- 2..Setting
- 3..Digital OUTPUT (only level 2)
- 4..Upward adjustment
- 5..Downward adjustment
- 9..Alarm reset (level 2 only)
- 20..Error log
- 10..Information

Parameter	Reading level	Editing level	Name	Description	Unit of measure	Range
100	1	1	Digit board	Digit board: same as digit on the board: R03="board ok". For alarm code, see section Alarms and error	/	/
101	1	-	Pressure	Valve pressure: pressure value from pressure sensor at the outlet of the valve	bar	0-100
102	1	-	Temperature	Oil temperature: temperature of oil from temperature sensor	°C	0-100
103	1	-	Board voltage	Voltage supplied to the board: 24 VDC	V	24±20%
104	2	-	Board current	Current supplied to the board	mA	0-1000
105	2	-	Board temperature	Temperature of the board	°C	0-100
106	2	-	Current phase A stepper	Current supplied to phase A of the stepper motor	mA	0-1000
107	2	-	Current phase B stepper	Current supplied to phase B of the stepper motor	mA	0-1000
108	2	-	Current ED downtravel solenoid	Current supplied to downtravel solenoid ED. Reference value depends to solenoid voltage	mA	0-2000
109	1	2	Valve position SET	Set value of stepper motor (given)	Millesimi	0-1000
110	1	-	Valve position GET	Get value of stepper motor (got)	Millesimi	0-1000
113	2	4	Counter"no torque stepper"	Times that stepper motor gives no answer to torque command	/	/
114	2	-	Acknowledge code	Retentive alarms, to be manually removed, are indentified by letter "H" (see alarms code list). Use parameter 920 to reset acknowledge code	/	/

115	2	-	Alarm code	Alarm that must be solved to restart the operation of the valve (see alarm codes list)	/	/
116	2	3	Number of trips	Number of trips performed by the valve, starting from commissioning.	/	/
117	1	-	Digital input	State of digital input. 0=off, 1=on	Binary	/
118	1	-	System digital input	State of system digital input. 0=off, 1=on	Binary	/
119	1	-	Digital output	State of digital output. 0=off, 1=on	Binary	/
120	1	-	System digital output	State of system digital output. 0=off, 1=on	Binary	/
121	2	-	Static pressure	Pressure value registered at elevator stop, before starting	bar	0-100
122	2	-	Dynamic pressure	Pressure value registered during travel at nominal speed.	bar	0-100
123	2	-	Delta pressure up	Difference between dynamic and static pressure in up direction	bar	-20; +20
124	2	-	Delta pressure down	difference between dynamic and static pressure in down direction	bar	-20; +20
129	2	-	Electrical resistance of motor PTC	value of electrical resistance of motor PTC, if it is connected to CN6 and enabled by parameter 912 (optional)	Ohm Ω	500-2000
200	1	1	Jack diameter	Jack nominal diameter (plunger diameter)	mm	50-238
201	1	1	Jacks number	Number of jacks of the lift	/	1-4
202	1	1	Reeving ratio	Reeving ratio: 1=direct; 2 =1:2	/	/
203	1	1	Minimum pressure	Minimum pressure of the lift (nameplate value)	bar	5-50
204	1	1	Maximum pressure	Maximum pressure of the lift (nameplate value)	bar	5-50
205	1	1	Levelling speed	Levelling and relevelling speed	m/s	0,02-0,14
206	1	1	Nominal speed	Nominal speed	m/s	0,12-1,00
207	1	1	Inspection speed	Inspection speed	m/s	0,15-0,60
208	1	1	Home speed	Home speed (if managed by control board)	m/s	0,15-0,40
209	2	2	Low floor speed	Low floor speed (if managed by control board)	m/s	0,15-0,6
210	1	1	Relevelling speed	Relevelling speed (if managed by control board) - to be used if a different speed from levelling is required for relevelling)	m/s	0,02-0,20
211	2	2	Available speed 6	Available speed 6 (optional)	m/s	0,00-1,00

212	2	2	Available speed 7	Available speed 7 (optional)	m/s	0,00-1,00
214	2	2	Nominal current ED solenoid	Setted nominal value of ED solenoid current	mA	100-10000
215	2	2	Tolerance current ED solenoid	Setted tolerance for checking of ED solenoid current.	%A	1-100
216	2	2	Minimum valve pressure	Minimum allowable pressure for the valve	bar	2,0-10,0
217	2	-	Full load pressure	Full load pressure: calculated as 80% of maximum pressure (Par. 204)	bar	/
218	2	-	Overload pressure	Overload pressure: calculated as 110% of maximum pressure (Par. 204)	bar	/
219	2	-	Maximum valve pressure	Maximum allowable pressure for the valve	bar	40-80
220	2	3	Max oil temperature	Maximum allowable temperature for oil	°C	50-80
221	2	3	Min oil temperature	Minimum allowable temperature for oil	°C	0-20
223	2	2	Limit sensor UP (S4)	Limit for control of SM open position by sensor S4	Millesimi	0-1000
224	2	2	Limit sensor DOWN (S5)	Limit for control of SM close position by sensor S5	Millesimi	0-1000
225	2	2	Tolerance for position sensors	Tolerance control value for position sensor S4, S5, S6	Millesimi	0-1000
230	2	2	Enable of acknowledge for motor temperature alarm	Enable retentive alarm probe PTC: 0=OFF, 1=ON	/	/
231	2	3	Lower resistance limit for motor temperature alarm	Lower resistance limit for motor temperature alarm: default=50	Ohm Ω	0-20000
232	2	3	Upper resistance limit for motor temperature alarm	Upper resistance limit for motor temperature alarm: default=3000	Ohm Ω	0-60000
233	2	3	Tolerance upper limit for motor temperature alarm	Tolerance upper limit for motor temperature alarm. Default=1500	Ohm Ω	0-10000
234	2	3	Tolerance lower limit for motor temperature alarm	Tolerance lower limit for motor temperature alarm. Default=20	Ohm Ω	0-10000

235	2	2	Alternative cycle-test	Parameter to be used for apply not standard cycle or test: 0= normal operation "R03" 1= Firmware update "U01" 2= stepper motor movement "P02" 3= lift movement at a pre-setted value "P03" (ATTENTION: only for expert users)	/	/
236	2	2	Enable of UCMP test and rupture valve test	Enable the test for UCMP or rupture valve test: to be used for maintenance test. If enabled it allows only one down travel of the lift. Disable it after test.	/	/
300	2	2	Setting NO/NC relay output	To change the state NO/NC of digital relay output. Default NO (normally open) Digital relay output are 6 (CN13 and CN14)	/	/
301	2	2	Digital Output motor-pump	Output for starting of motor-pump	/	DO01-DO06
302	2	2	Digital Output min pressure	Output for minimum pressure (output changeable)	/	DO01-DO06
303	2	2	Digital Output full load pressure	Output for full load pressure (output changeable)	/	DO01-DO06
304	2	2	Digital Output overload pressure	Output for over load pressure (output changeable)	/	DO01-DO06
305	2	2	Digital Output run	Output for run	/	DO01-DO06
306	2	2	Digital Output Ready	Check the status of the board. If board is not ready, no commands are allowable	/	DO01-DO06
307	2	2	Digital Output max pressure	Output for maximum pressure (output changeable)	/	DO01-DO06
308	2	2	Digital Output min temperature	Output for minimum oil temperature (output changeable)	/	DO01-DO06
309	2	2	Digital Output max temperature	Output for maximum oil temperature (output changeable)	/	DO01-DO06
310	2	2	Digital Output Overload or max pressure	Output for overload or maximum pressure (output changeable)	/	DO01-DO06
311	2	2	Digital output Pmin or Tmax or Tmin	Output for minimum pressure or max temperature or min temperature (output changeable)	/	DO01-DO06
312	2	2	Digital Output Free 1	Free output and changeable	/	DO01-DO06
313	2	2	Digital Output Free 2	Free output and changeable	/	DO01-DO06
314	2	2	Digital Output Free 3	Free output and changeable	/	DO01-DO06

315	2	2	Digital Output Free 4	Free output and changeable	/	DO01-DO06
316	2	2	Digital Output Free 5	Free output and changeable	/	DO01-DO06
400	1	1	Acceleration time UP	Time for acceleration from zero to nominal speed in UP direction. Increase the time for more comfort. Standard=2s	s	0,5-5,0
401	1	1	Transition time UP	Time for deceleration from nominal speed to levelling speed. Increase the time for more comfort. Standard= 2,5s	s	0,5-5,0
402	1	1	Stopping time UP	Time for stopping deceleration in UP direction. Standard=0,3s	s	0,1-1,0
403	1	1	Transition offset UP	Move forward the position of transition in up direction (as an alternative is it possible to move the magnetic sensor in the lift shaft) Standard=0	mm	0-1000
404	1	1	Stopping offset UP	Move forward the stopping position in up direction (as an alternative is it possible to move the magnetic sensor in the lift shaft) Standard=0	mm	0-100
405	2	2	Transition offset low floor UP	Move forward the position of transition in UP direction - it acts only on low floor (as an alternative is it possible to move the magnetic sensor in the lift shaft) Standard=0	mm	0-1000
406	1	1	Nominal speed UP - adjustment	Adjustment % of nominal speed in UP direction. Standard=100%=speed set in Par.206	%	50-150
407	1	1	Levelling speed UP - adjustment	Adjustment % of levelling speed in UP direction. Standard=100%=speed set in Par.206	%	50-150
408	2	2	Low floor speed UP - adjustment	Adjustment % of low floor speed in UP direction. Standard=100%=speed set in Par.209	%	50-150
409	2	2	Acceleration curve UP	Curve of acceleration in UP direction, available profiles: 0,1,2	/	/
410	2	2	Transition curve UP	Curve of transition in UP direction, available profiles: 0,1,2	/	/
411	2	2	Stopping curve UP	Curve of stopping in UP direction, available profiles: 0,1,2	/	/

412	1	2	Starting delay motor pump UP	Delay of motor pump - delay of activation of motor pump output after receiving a command of travel in UP direction. Standard=0,6s	s	0,2-5,0
413	1	2	Stopping delay motor pump UP	Delay of motor pump - delay of stopping of motor pump output after arriving at floor. Standard=1,3s	s	1,0-5,0
414	1	2	Acceleration time relevelling UP	Time for acceleration from zero to relevelling speed in UP direction. Standard=0,1s	s	0,1-0,7
415	1	2	Stopping time relevelling UP	Time for stopping in relevelling UP direction. Standard=0,1s	s	0,1-1,0
419	2	2	Re-levelling pressure	0=disabled; 1-4: enabled with pressure =Pmin (par.203); da 5 a 50: enabled with selected pressure	bar	0-50
500	1	1	Acceleration time DOWN	Time for acceleration from zero to nominal speed in DOWN direction. Increase the time for more comfort. Standard=2s	s	0,5-5,0
501	1	1	Transition time DOWN	Time for deceleration from nominal speed to levelling speed. Increase the time for more comfort. Standard= 2,5s	s	0,5-5,0
502	1	1	Stopping time DOWN	Time for stopping deceleration in DOWN direction. Standard=0,3s	s	0,1-1,0
503	1	1	Transition offset DOWN	Move forward the position of transition in DOWN direction (as an alternative is it possible to move the magnetic sensor in the lift shaft) Standard=0	mm	0-1000
504	1	1	Stopping offset DOWN	Move forward the stopping position in DOWN direction (as an alternative is it possible to move the magnetic sensor in the lift shaft) Standard=0	mm	0-100
505	2	2	Transition offset low floor DOWN	Move forward the position of transition in DOWN direction - it acts only on low floor (as an alternative is it possible to move the magnetic sensor in the lift shaft) Standard=0	mm	0-1000
506	1	1	Nominal speed DOWN - adjustment	Adjustment % of nominal speed in DOWN direction. Standard=100%=speed set in Par.206	%	50-150
507	1	1	Levelling speed DOWN - adjustment	Adjustment % of levelling speed in DOWN direction. Standard=100%=speed set in Par.206	%	50-150

508	2	2	Low floor speed DOWN - adjustment	Adjustment % of low floor speed in DOWN direction. Standard=100%=speed set in Par.209	%	50-150
509	2	2	Acceleration curve DOWN	Curve of acceleration in DOWN direction, available profiles: 0,1,2	/	/
510	2	2	Transition curve DOWN	Curve of transition in DOWN direction, available profiles: 0,1,2	/	/
511	2	2	Stopping curve DOWN	Curve of stopping in DOWN direction, available profiles: 0,1,2	/	/
512	1	2	Opening delay ED valve	Delay of opening of ED valve after input command down travel. Standard=30ms	ms	0-100
513	1	2	Closing delay ED valve	Delay of closing of ED valve after arriving at floor. Standard=50ms	ms	0-200
514	1	2	Acceleration time relevelling DOWN	Time for acceleration from zero to relevelling speed in DOWN direction. Standard=0,1s	s	0,1-0,7
515	1	2	Stopping time relevelling DOWN	Time for stopping in relevelling DOWN direction. Standard=0,1s	s	0,1-1,0
900	2	2	Alarm 01: current ED solenoid	Enable the alarm for checking of ED solenoid current. Standard ON.	/	/
901	2	2	Alarm 02: timeout UP	Enable the alarm maximum time in UP travel. Standard ON.	/	/
902	2	2	Alarm 03: timeout DOWN	Enable the alarm maximum time in DOWN travel. Standard ON.	/	/
903	2	2	Alarm 04: sensor OPEN - S3	Enable the alarm sensor S3 - checking of opening BV. Standard ON.	/	/
904	2	2	Alarm 05: sensor CLOSE - S2	Enable the alarm sensor S2 - checking of opening BV. Standard ON.	/	/
905	2	2	Alarm 06: sensor CVP - S1	Enable the alarm sensor S1 - checking of closing of CVP. Standard ON.	/	/
906	2	2	Alarm 07: stepper motor	Enable the alarm stepper motor checking. Standard ON.	/	/
907	2	2	Alarm 08: board voltage supply	Enable the alarm board voltage supply. Standard ON.	/	/
908	2	2	Alarm 09: Min Pressure	Enable the alarm min pressure. Standard OFF. To be enabled after first installation.	/	/
909	2	2	Alarm 10: max pressure	Enable the alarm max pressure. Standard ON.	/	/
910	2	2	Alarm 11: min temperature	Enable the alarm min oil temperature. Standard ON.	/	/

911	2	2	Alarm 12: max temperature	Enable the alarm max oil temperature. Standard ON.	/	/
912	2	2	Alarm 13: motor thermal protection	Enable the alarm of PTC motor thermal protection. Standard OFF: to be enabled if MLCHU board is used to check PTC sensor	/	/
920	1	1	Code to reset the Acknowledge alarm	Password to delete the acknowledge error (H): insert password 111 to delete the error.	/	/
1000	1	3	S/N Valvola	Valve serial number	/	/
1000	1	3				
1000	1	3				
1001	1	3	Ref. Cliente	Reference number of the lift	/	/
1001	1	3				
1002	1	3	S/N board	Serial number of microprocessor of the board	/	/
1002	1	3				
1002	1	3				
1002	1	3				
1003	2	2	ID board	Identification number of the board	/	/
1003	1	2	Minute	Minutes of the clock	min	0-59
1004	1	2	Day	Day of the clock	gg	0-31
1005	1	2	Month	Month of the clock	mm	0-12
1006	1	2	Year	Year of the clock	aa	20…
1007	1	2	Second	Second of the clock	s	0-59
1009	1	2	Hour	Hour of the clock	h	0-23
1010	1	3	ID bluetooth	Identification number of the board for bluetooth connection	/	/
1011	1	2	PreSet timer bluetooth	PreSet timer for bluetooth connection	min	0-120
1012	1	-	Timer bluetooth	Timer for bluetooth connection	min	/
2001	1	-	Lates error index	Index of the latest error recorded by the board. Max error list: 40 items.after 40 errors. The old errors are overwritten	/	1-40
2010..2400	1	-	Pos.1 error code	Code and description of the error (1..40)	/	/
2011..2401	2	-	Pos.1 error hour	Error hour	/	/
2012..2402	2	-	Pos.1 error minute	Error minute	/	/
2013..2403	2	-	Pos.1 error day	Error day	/	/
2014..2404	2	-	Pos.1 error month	Error month	/	/
2015..2405	2	-	Pos.1 error year	Error year	/	/
2020	1	-				

Additional notes on parameters 117, 118, 119, 120.

Parametro	Nome	bit												
		13	12	11	10	9	8	7	6	5	4	3	2	1
117	Ingressi digitali	Over-voltage 24V	on-off valve power power	CN3	CN4	CN5	(CN12) DI8	(CN12) DI7	(CN12) DI6	(CN12) DI5	(CN12) DI4	(CN12) DI3	(CN12) DI2	(CN12) DI1
118	Ingressi digitali di sistema	-								SW1	SW1	SW1	SW1	SW1
119	Uscite digitali	-						CN1	CN14	CN14	CN13	CN13	CN13	CN13
120	Uscite digitali di sistema	-										USB led	led 24V	CPU led
		13	12	11	10	9	8	7	6	5	4	3	2	1

9. SAFETY AGAINST UNCONTROLLED MOVEMENTS

9.1. Description of components

The VEM250 valve consists of:

- A CVP check valve driven by the ED coil
- A BV control spool controlled by the SM motor

The position of the spools is monitored by the sensors:

- S1 sensor: checks the closing of the CVP valve
- S2 Sensor: checks the closure of the BV valve
- S3 sensor: checks the open status of the BV valve

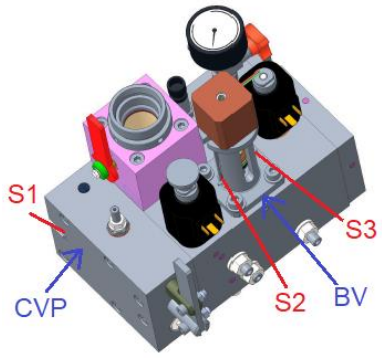

The BV control spool adjusts both the upward phase (directly controlling the oil intended for discharge and indirectly the one intended for the cylinder) and the downward phase (directly).
To ensure the safety requirements in line with EN 81.20, the valve has CVP and BV spools in series. Both work together to stop the lift car in different ways, whether during upward or downward.
Both spools are normally closed when the power is off, thanks to the presence of springs. If both spools are not opened at the same time, the lift car does not descend.

During all phases, the plant checks that the spools reach their correct open and closed positions. If this does not happen, the control board displays errors/alarms that prevent the plant from running.

9.2. Uncontrolled movement test requirements

In order to check the correct performance of the devices against uncontrolled movement, it is necessary to proceed with the tests required by appendix C1 of the Standard EN81-20 and check that the controller and the plant perform in compliance with the Standard (EN 81-20, par.5.6.7). According to EN81-20, the following points must be respected:

- The plant must be equipped with at least one switch device capable of detecting the uncontrolled movement of the lift car.
- The controller must not send any commands to the valve and motor-pump unit when the car is outside the door unlocking zone with its doors not closed.
- The electrical controller shall be equipped with a suitable system to detect uncontrolled movements of the car, as required in points 5.3.8 and 5.12.1.4 of EN 81-20. If this circuit detects a movement of the car with the doors not closed, outside the unlocking zone, it will prevent the controller from sending any command to the valve. The system must only be reset by authorised and suitably trained personnel.
- The controller shall be equipped with a manual operation system that allows to simulate with closed doors the uncontrolled movement of the car with open doors

NOTE: The procedures for testing the device that detects uncontrolled movements are handled by the control panel and therefore the procedures listed below are incidental and non-discriminatory.

9.3. Downward uncontrolled movement

For safety reasons, it is required that the test takes place with the doors closed. Therefore, proceed as follow:

1. Check that the plant is not accessible to any user by putting up "Out of Service" signs on all floors.
2. Run the car at full load to the floor above the bottom landing.
3. Wait for the car door to close.
4. Start the test procedure for uncontrolled downward movements on the controller. This procedure must:
   - Exclude the possibility of calling the plant from the outside.
   - Open the electric safety chain at the landing door level (for the system, the doors must result open even if they are physically closed).
5. Carry out a lift call from the lowest landing. The plant starts descending at rated speed and the switch designed to detect uncontrolled movement must be activated by stopping the car according to EN 81.20.
6. Once the test has been carried out, restore the doors the safety circuit, reset the controller to normal operation and drive the car to a landing suitable for the normal operation of the lift plant.
7. Restore normal operation of the lift by removing the out-of-service signs.

9.4. Test of UCMP monitoring

The MLHCU board performs at each travel a monitoring of the correct opening and closing of the CVP and BV valves by means of their control sensors. The board always displays the READY=ON signal during normal lift operation. In the event of a fault, the board displays one of the following alarm messages: A4, A5, A6. A4, A5, A6. The alarm remains active until it is fixed (see alarm list) and the READY signal remains OFF until the normal operation of the lift is restored.
If one of the above alarms has occurred, once resolved, an error message H4, H5, H6 remains on the board, requiring the intervention of an authorised person for its correction (see parameter file). Up until the error message is finally reset, the board will not enable any further travels to be operated.

In order to test the monitoring system, it is therefore sufficient to check at the end of any travel that one of the Alarm/Error signals described above is not displayed.

Check that the controller correctly handles the READY signal from the board. The controller must not allow movement of the plant and must not send commands to the valve and/or motor/pump unit when the READY signal is not set to ON.

NOTE
If required, it is possible to simulate a sensor fault by removing either the CN3 or CN4 connector from the board. In this case the board will not send the READY command to the controller for the movement of the plant. Any alarms will be displayed in the board alarm history.

10. USER INTERFACE

10.1. Display and System Digital Inputs

SW1: System Digital Inputs, Par. 119		
Dip	***Associated function***	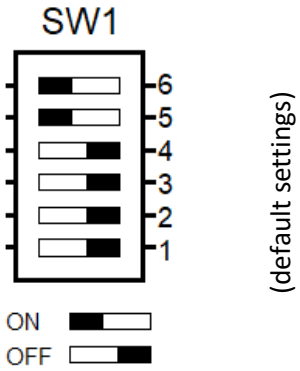
6	CAN resistor (on/off)	
5	*DI8 bypass - see note*	
4	-	
3	-	
2	-	
1	Reset acknowledge	
<u>Note dip 5:</u> *ON=DI8 considered as a digital input - no connection with safety chain on DI8 required. OFF= DI8 considered as safety input – considered as safety input*		

DIS1	
Board status display: R03=board ready to receive commands Txx= board in run mode (xx progressive numbers of the run sequence) Axx= board in alarm Hxx=error to be reset Note: for error and alarm codes, see chapter 10.4.	

10.2. Bluetooth connection

To connect to the board with bluetooth:

1	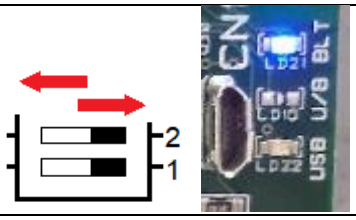	Activate dip 2 mmoving it in position ON and then again in position OFF. Bluetooth is activated for a set time interval (*).
2	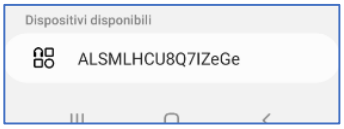	On the device that you want connect, search the devices and select the board (usually board is identified by serial number of the lift)
3	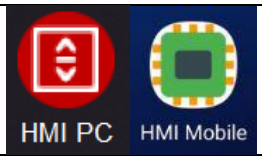	Open the HMI application to see the valve parameters.

* when bluetooth is activated, it remains on for the set interval time. When the timer is close to expire it is possible to restart it by repeating point 1.

Bluetooth state signals			
	**LED BLU**	**LED VERDE**	**status**
	OFF	ON	Bluetooth off, standard condition
	ON blinking slowly	OFF	Bluetooth ready for connection
	ON blinking slowly	ON blinking	Bluetooth ready – timer close to expire
	ON blinking fast	OFF	Bluetooth connected to a device
	ON blinking fast	ON blinking	Bluetooth connected to a device - timer close to expire

10.3. Board operation light signals

BOARDS POWER SUPPLY

CPU led: indicator of CPU operation. Normally blinks slowly.

Led 5V: on to indicate power supply of microprocessor

Led 24V: see table below.

LED STATE 24V	
Voltage	**LED status**
24 VDC, up to ±20%	Led permanently on
24 VDC, from ±20% up to ±30%	Led blinking fast
24 VDC, over ±30%	Led off

UPWARD

1) Stationary plant: READY=ON; RUN/STOP=OFF; S1 and S2=ON

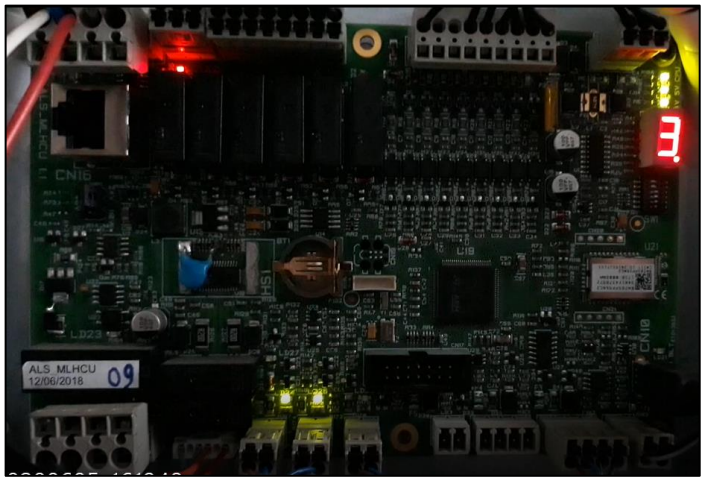

2) High upward speed: READY, RUN/STOP, DO1=ON; DI1 and DI3=ON.

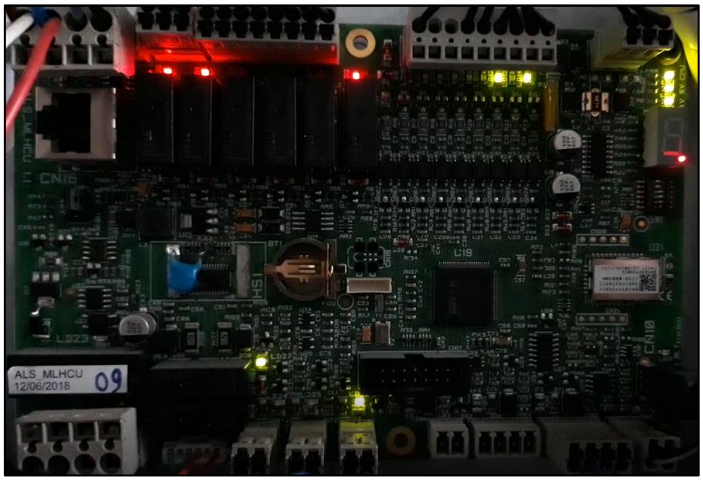

3) Low upward speed: READY, RUN/STOP, DO1=ON; DI1=ON; DI3=OFF.

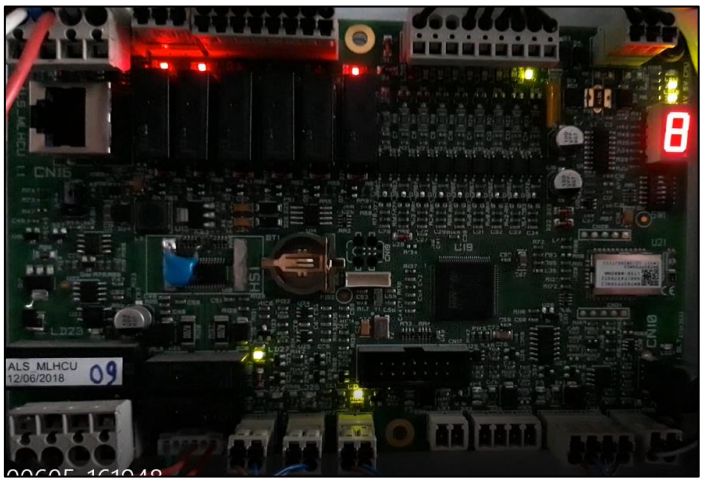

DOWNWARD

1) Stationary plant: READY=ON; RUN=OFF; S1 and S2=ON.

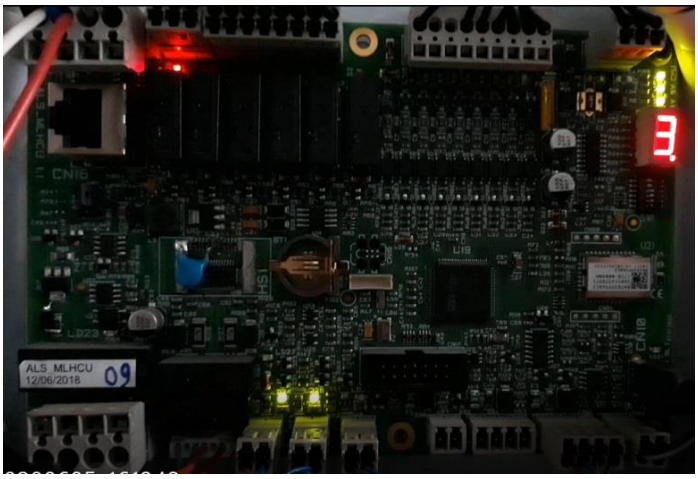

2) High downward speed: READY, RUN/STOP=ON; DI2 and DI3=ON

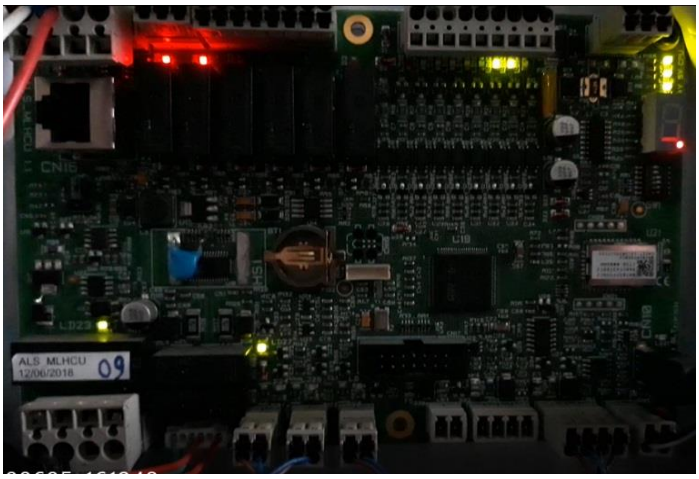

3) Low downward speed: READY, RUN/STOP=ON; DI2=ON; DI3=OFF.

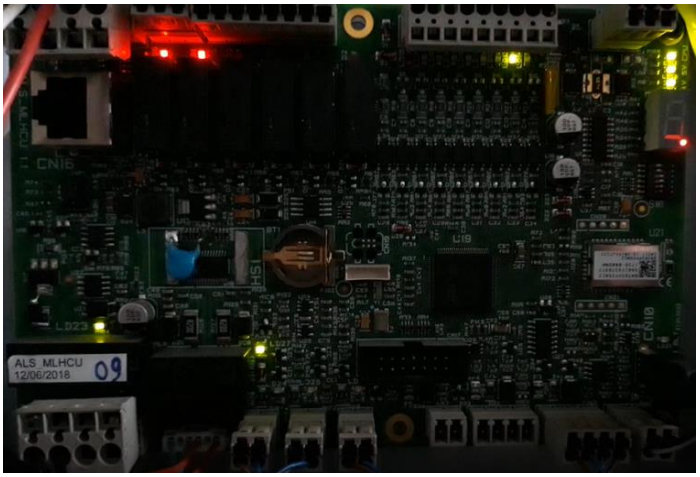

10.4. Alarm codes and errors

- Axx alarms are not cleared until the alarm is resolved and the control board does not allow for system motion.
- Exx Errors are stored in the error list after the resolution of the Axx alarms.
- Hxx retentive errors require qualified personnel to reset them using one of the following procedures:
    - By entering the password set in par. 920 (default password "111").
    - Acting manually on the board through dip 1 of SW1, see chapter 11. Set dip 1 to the On position and then Off again.

Code list Alarms/Error	Description	Potential causes	Checks/solution
A01	ED valve power supply alarm.	The coil supply voltage on input CN15 is not correct. The ED coil voltage (JMP1) is not correctly selected on the board. The electrical current absorbed by the coil (Par. 108) does not belong to the allowed range.	Check that the supply voltage on CN15 is consistent with the voltage of the installed ED coil. If so, correct the supply voltage or replace the coil. Check that the position of JMP1 on the board corresponds to the voltage of the ED coil. Check that the rated current (Par. 214) corresponds to the value reported on the ED coil.
A02	Upward time out alarm	Excessive time to complete the travel	Check that Dip switch are in correct position. See 10.1 Check that the plant is moving upwards at rated speed.
A03	Downward time-out alarm	Excessive time to complete the travel.	Check that the plant is moving downwards at rated speed. Check that Dip switch are in correct position. See 10.1
A04	S3 sensor alarm	At the moment in which the alarm is displayed, the S3 sensor detects an inconsistent BV valve position.	See error H04
A05	S2 Sensor alarm	At the moment in which the alarm is displayed, sensor S2 detects an inconsistent BV valve	See error H05

		position.	
A06	S1 sensor alarm	At the moment in which the alarm is displayed, sensor S1 detects an inconsistent CVP valve position.	See error H06
A07	Motor fault alarm	Inconsistent stepper motor movement	See error H07
A08	Power supply alarm	Incorrect power supply of the board	Check the board power supply voltage. See chapter 6.2 and chapter 10.2
A09	Minimum pressure alarm	Pressure outside the operating range.	Check that the shut-off valve is open. Check that the plant wire-ropes are not loose.
A10	Maximum pressure alarm	Pressure out of operating range.	Check that the shut-off valve is open. Check that the plant is free to move.
A11	Minimum temperature alarm	Oil temperature below the permissible temperature.	Check that the oil heater is on or consider installing an oil heater.
A12	Maximum temperature alarm	Oil temperature higher than permitted.	Wait for oil to cool. Check cause of overheating
A13	Motor thermal protection alarm (PTC)	Motor thermal protection activation due to motor overheating.	Check that the motor is not overloaded (excessive pressure or blocked rotor). Check the supply voltage of the individual motor phases.
H04	S3 Sensor Error	An inconsistent BV valve position has been detected during operation.	Reset the retentive error (see procedure at the beginning of the chapter) and run a new travel. If the error persists: check the correct positioning of the sensor, see paragraph 11.3
H05	S2 Sensor error.	An inconsistent BV valve position has been detected during operation.	Reset the retentive error (see procedure at the beginning of the chapter) and run a new travel. If the error persists: check the correct positioning of the sensor, see paragraph 11.3

H06	S1 Sensor error	An inconsistent position of the CVP valve has been detected during operation.	Reset the retentive error (see procedure at the beginning of the chapter) and run a new travel. If the error persists: check the correct positioning of the sensor, see paragraph 11.3
H07	Motor fault error	The BV motor has had a malfunctioning.	Reset the retentive error (see procedure at the beginning of the chapter) and run a new travel. If the error persists: contact technical assistance
R02	Position sensors not connected	Sensor S1 or S2 not correctly connected	Check the connection of sensors S1 and S2 See H05 and H06
R04	Inconsistent direction command.	The board receives inconsistent movement commands as input.	Check the input commands on CN 12. See chapter 6.1
E09	Interface error	Switch 01 of the SW1 command is ON	Set switch 01 of the SW1 command in OFF position

11. MAINTENANCE AND TROUBLESHOOTING

11.1. Ordinary maintenance

Check	Description	Frequency
Tightness of valve seals	At the end of the installation and during the periodic visits, check the tightness of the seals as follows: with the oil at room temperature, close the shut-off valve and open the pressure gauge shut-off valve. Check that the pressure indicated on the pressure gauge does not drop by more than 5 bar in 3 minutes.	Every 6 months
Check of the oil level	With the lift car on the top floor, use the dipstick to check the minimum oil level (the motor must always be covered by the oil).	Every 6 months
Oil properties.	Visually check that the appearance of the oil has not changed. Carry out this operation after leaving the plant stationary for a few hours.	Every 6 months
Motor protection efficiency.	Disconnect one of the ends of the thermistor sets and check that the motor protection device is activated.	Every 6 months
Filter:	Check the F pilot filter installed on the valve unit and clean it if necessary.	Every 6 months
Pressure check.	Check static and dynamic pressure values after installation. Periodically check that the values measured have unchanged.	Every 6 months
Check the pressure gauge cut-off valve.	Close the shut-off valve, open the pressure gauge shut-off valve and completely relieve the pressure by acting on the manual emergency downward. Close the pressure gauge tap, open the shut-off valve and check that the pressure level on the gauge is zero. Reopen the valve and check that the pressure value increases on the gauge again.	Every 6 months
Hand pump operation.	Take the hand pump lever and try to operate the pump. Check that the lift car rises. If the pump does not work, bleed any air by unscrewing the SPman screw, continuing to operate the pump until no oil can be seen leaking from the SPman screw. Close the SPman screw and make sure that the lift car rises.	Every 6 months
Static pressure test.	Open the pressure gauge shut-off valve and close the shut-off valve. Operate the hand pump until the hand pump over-pressure is gradually reached. Check for any pressure loss from the valve assembly or for a rapid drop in gauge pressure. When the test is complete, relieve the pressure by means of the emergency downward procedure and reopen the shut-off valve.	Every 6 months
Shut-off valve tightness.	Close the shut-off valve and open the pressure gauge cut-off valve. Release the pressure completely by manually acting on the emergency downward. Check that the pressure level on the pressure gauge is zero.	Every 6 months
Check the board connections.	Check that all connections to the board are correctly made. Check for damaged or sheared cables.	Every 6 months
Board error check.	Check the board for recurrent errors, see chapters 7 and 10	Every 6 months

NOTE1: In case of oil replacement, the oil must not be dispersed in the environment, but must be delivered to companies specialized in waste oil disposal.
NOTE2: At the end of the power unit life, or any of its internal components, do not disperse components in the environment, but contact companies which recover ferrous materials, or contact the manufacturer directly.

11.2. Troubleshooting

Fault	Potential cause	Potential solution
The board is not in READY mode and R03 is not displayed.	The board does not allow a travel to be run because it is not set to READY mode.	To fix the problem, see the wording on the board and check the type of error in Chapter 10.4
The plant is moving slowly both upward and downward and stops suddenly without slowing down.	The plant is moving during maintenance/inspection.	Check the speed type set on the controller connection, chapter 6.2
The plant is only moving at low speed.	The board is not receiving the speed signals correctly.	Check its commands in chapter 6
The plant starts upwards abruptly (moves fast for a while, slows down and then returns to the correct speed).	The motor starts before the PUMP/ MOTOR signal.	Check that the PUMP/ MOTOR, RUN/STOP and READY signals are received, as indicated in chapter 6.2.
The plant starts upwards with uneven acceleration (small initial jerk and subsequent correct acceleration).	The starting time is not correct, the flow line is anticipated and the oil arrives at the piston before the motor enters in torque.	Increase the value of Par. 412 of the menu to delay the flow line start.
The plant has a jolt on arrival at the landing and the lift stops out of level.	The motor shutdown delay time is incorrect.	Increase the value of Par. 413 of the menu to delay the motor shutdown delay.
During a downward start, an abrupt jolt is heard from the plant.	The synchronisation between the ED valve control and the stepper motor is incorrect, or there is a lot of friction on the plant.	• Act on parameter Par. 512 • Decrease Par. 500 • Try changing the downward profile, Par. 509
The plant slips when arriving at the landing.	The plant fails to perform the deceleration curve.	• Diminish Par. 401 for upward and Par. 501 for downward, to ensure correct arrival at the landing. • Check Par. 403 and 503, then reduce values where required.

		• Check the mechanical position of the floor magnets. • Check that the speed of Par. 200, 201, 202 and 206 are correct. • Check that the discharge port of solenoid valve ED is free of dirt (contact Moris Italia technical assistance)
The lift plant does not stop perfectly at the floor during a travel.	The deceleration speed is too high.	• Check speed Par. 205 and try to decrease the parameter. • Check and possibly decrease par. 402 and 502.
The plant does not stop perfectly at the floor during the levelling phase.	The re-levelling speed is too high.	• Check and possibly decrease Par. 402 and 502. • Manage and check speed Par. 210. Manage speed appropriately, see chapter 6.3.
The plant stops at the speed change in deceleration, both when the car is empty and at full load.	If the setting is correct, the deceleration speed may be too low, or the low speed offsets are too low.	• Increase levelling speed Par. 205 • Check speed offsets Par. 403, 404, 503, 504
When stationary, all outputs are on.	Probable inversion of output wiring.	Change the output control logic on the controller, or invert the output logic on the board with Par. 300.
One of the digital OUTPUTS does not work.	A relay could be burnt out.	Try changing the pre-set outputs, Par. 301..306, modifying the wiring accordingly.
The plant receives a downward command, but the lift does not descend.	The ED solenoid valve may not be functioning, or the correct voltage has not been selected.	• Check the correct positioning of selector JMP1, see chapter 6.2. • Check the operation of the ED solenoid valve.

11.3. Replacing or adjusting position

WARNING: the sensors are factory-adjusted and perform a safety function. An adjustment in situ has to be carried out with the plant out of operation and by qualified personnel.

INSTRUCTIONS FOR SENSOR INSTALLATION

Insert the sensor

Turn the sensor

Tighten the screw **CAUTION:** Tighten very gently.

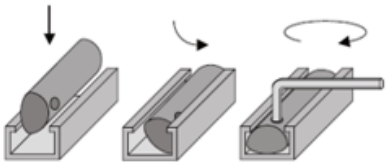

Adjustment measures for sensor re-positioning.		
S1	**S2**	**S3**
12 mm	7 mm	21 mm
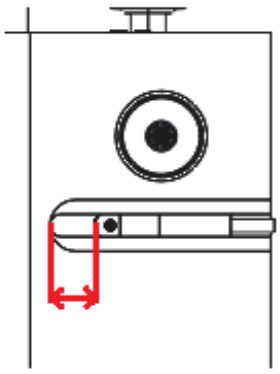	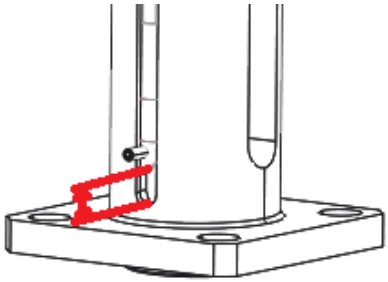	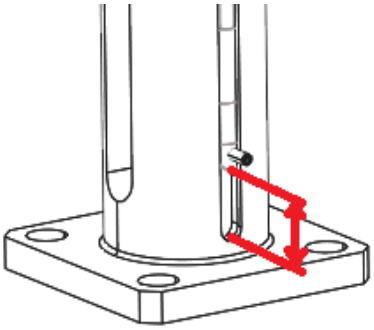

12. CERTIFICATION

The VEM250 electronic valve has been certified as part of a system against uncontrolled downward movements, in accordance with TUV **EDCI049.**

Please, visit the Moris Italia website (www.moris.it) to download all documentation concerning the certification.